Bus Protection Considerations for Various Bus Types

Caitlin Martin, *Bonneville Power Administration*
Steven Chase, Thanh-Xuan Nguyen, Dereje Jada Hawaz, Jeff Pope, and Casper Labuschagne,
Schweitzer Engineering Laboratories, Inc.

***Abstract*—Choosing a bus protection scheme requires several key considerations. The complexity of bus protection varies considerably depending on such factors as the bus layout, allowed bus switching scenarios, availability of suitable current transformers (CTs), and maintenance issues.**

Buses with statically assigned zone currents are well suited for the use of high-impedance bus relaying (if suitable CTs are available) and do not require disconnect status inputs. For substations with terminals capable of switching between different buses, it is necessary to dynamically assign input currents to the bus zones of protection based on the disconnect auxiliary contact status. To avoid misoperations resulting from disconnect auxiliary contact failures, such substation configurations can require the use of a second trip criterion, such as a check zone.

Low-impedance numerical relays are especially well suited for protecting more complex bus configurations with dynamic zone selection because they enable zone reconfiguration without any need for corresponding changes to physical CT wiring.

While bus differential relaying provides protection for all bus arrangements, fast bus tripping and directional elements can provide adequate protection for some arrangements.

Surge arresters and CTs (depending on their placement, saturation, and ratio) generally influence bus protection scheme selection and performance.

This paper examines several common bus configurations, presents appropriate protection schemes for each configuration, and analyzes the protection scheme complexity, advantages, and disadvantages.

I. Introduction

There is considerable variability among common bus configurations in terms of layout and complexity. The simplest configurations in terms of construction and layout are generally the least complex to protect, and this simplicity comes in exchange for less service reliability. Features that increase the service reliability of a bus also tend to necessitate a more complex bus protection scheme. As bus protection complexity increases, more sophisticated relaying is required and additional station information (such as disconnect status) must be incorporated into the protection scheme. This paper examines buses spanning the complexity spectrum and discusses some of the important aspects of their protection.

II. Bus Differential Protection Fundamentals

Bus differential protection is based on Kirchhoff's current law, which states that the sum of currents entering a node is zero. A bus is treated as a node, and current measurements are taken from all terminals connected to the bus. Under normal conditions, the currents sum to zero. During a fault, the currents do not sum to zero. In general, the sum of measured currents is known as the operating quantity, and the operating quantity can be either physical or numerical.

The locations of current transformers (CTs) define the boundary of a differential protection zone. In differential protection, CTs are oriented so that a line drawn from the polarity mark to the protected equipment passes through the CT. The opposite polarity convention can also be used if it is applied to all CTs in the differential zone. Fig. 1 shows four CTs that form a bus differential protection zone. If a bus fault is detected within this zone, all terminal breakers within the differential zone open to clear the fault.

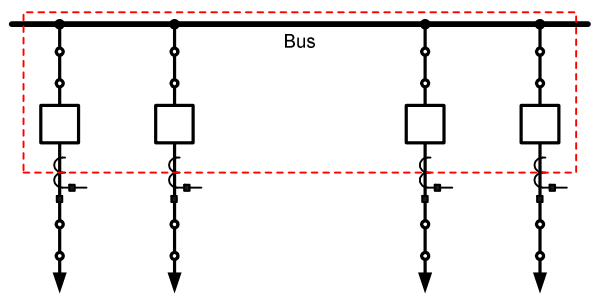

Fig. 1. Bus Differential Zone With CT Assignments

The most common bus differential relays use either high-impedance or low-impedance differential elements. A high-impedance differential relay forms an operating quantity by connecting zone CTs in parallel with a resistive element. A high-impedance differential relay can be microprocessor-based or electromechanical, and this paper makes no distinction between the two. A low-impedance differential relay presents a small burden to a CT, and there are several ways to configure low-impedance differential elements. For example, one option is to parallel CT currents on a per-phase basis so that the differential current feeds into an overcurrent element. Another option is to form a slope restraint characteristic, either electromechanically or numerically in a microprocessor-based relay. In this paper, low impedance refers to a differential relay that forms a slope restraint characteristic. Microprocessor-based, low-impedance relays are referred to as advanced differential relays.

Fig. 2 depicts a high-impedance differential element. The secondary CT currents are shown in parallel with the CT magnetizing reactances. In high-impedance applications, all CT ratios should be the same because the secondary operating quantity is the result of a physical summation of CT currents. It is also important for the CTs to have similar excitation characteristics, so as not to produce a false operating current for a given burden voltage. Under normal conditions, the sum of the CT currents is zero and no current flows through the resistive element. During a bus fault, the secondary operating current flows through the high-impedance element, resulting in a substantial voltage rise across the resistor. The relay senses this voltage rise and issues a trip signal. A metal oxide varistor (MOV) is used to limit the voltage applied to the resistor to tolerable levels.

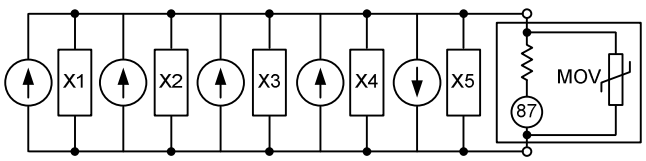

Fig. 2. High-Impedance Differential Element

If an external fault develops on one of the substation terminals, the CT on the faulted terminal can saturate, as shown in Fig. 3. The current sources on the left in Fig. 3 represent the contributions from the CTs on the unfaulted terminals, and the current source on the right represents the current from the CT on the faulted terminal. The current from the saturated CT circulates through the magnetizing branch (X5), and a false operating current divides between the high-impedance element and the sum of the internal and wire lead resistances of the saturated CT (R_{CT} and R_{LEAD}). Because of the relatively high resistance of the high-impedance element compared to the internal resistance of the faulted CT, only a small portion of the operating current enters the high-impedance element, ensuring security during the external fault.

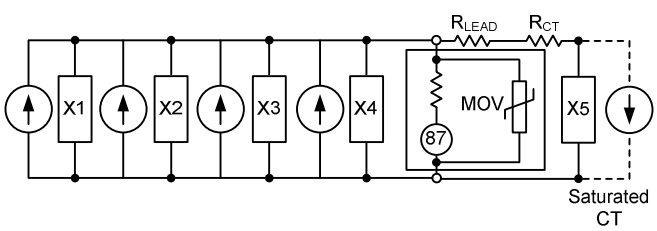

Fig. 3. High-Impedance Differential Element With a Saturated CT During an External Fault

The tripping voltage threshold of a high-impedance differential element must be set high enough to ensure immunity against false operating current due to CT saturation, differing CT excitation characteristics, and CT ratio errors.

Low-impedance differential relays form a slope restraint characteristic by means of operating and restraint quantities. The operating and restraint quantities are calculated as shown in (1) and (2).

$$IOP = \left| \sum_{k=1}^{N} I_k \right| \quad (1)$$

$$IRT = \sum_{k=1}^{N} \left| I_k \right| \quad (2)$$

where:

N is the number of terminals within the zone.

IOP is the operating quantity.

IRT is the restraint quantity.

I_k is the terminal current.

As indicated by (1) and (2), the operating quantity is the magnitude of the sum of the zone currents and the restraint quantity is the sum of the magnitudes of the zone currents. Fig. 4 shows a typical restraint characteristic.

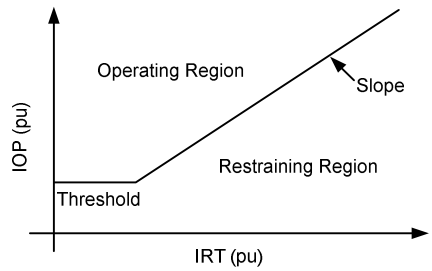

Fig. 4. Differential Restraint Characteristic

Advanced differential relays sample current inputs individually and represent current values numerically for use in internal calculations. The CTs used in an advanced differential scheme need not have identical transform ratios because the relay algorithms can numerically compensate for the differences when calculating the operating quantity.

If the operating quantity is greater than a minimum threshold and greater than a slope setting multiplied by the restraint quantity, the relay differential element trips. If these criteria are not met, the differential element restrains. For example, an operating quantity can result from CT ratio errors during heavy load conditions. The slope restraint characteristic makes the differential element secure in such a case due to the correspondingly high restraint current value.

An advanced differential relay can dynamically adjust the slope of its restraint characteristic during an external fault to remain secure should a CT saturate. During the time period after fault inception but before the CTs begin to saturate, an external fault is indicated by an increase in the restraint quantity without a corresponding increase in the operating quantity. This is in contrast to an internal fault, in which both the operating and restraint quantities increase at fault

inception. These signatures allow a differential element to rapidly distinguish between internal and external faults. An advanced differential relay uses raw, unfiltered current inputs to declare a fault as internal or external before the CTs begin to saturate (within 0.25 cycles after fault inception).

Fig. 5 illustrates the change in the restraint characteristic in response to an external fault, in which the characteristic switches from Slope 1 to Slope 2.

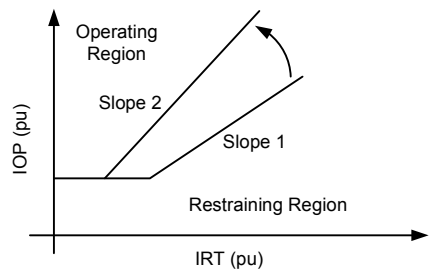

Fig. 5. Dynamic Slope Adjustment During an External Fault

When the relay transitions to the higher slope, a greater operating quantity is required for a given restraint quantity for the relay to trip. After the fault has been cleared, the relay transitions back to the lower slope. If an external fault evolves into an internal fault, additional supervisory elements (some of which are discussed later) detect the change and cause a transition back to the lower slope.

III. Discussion of Protection for Various Bus Types

A. Single-Bus Arrangement

The single-bus arrangement is the simplest and most economical arrangement available, with one breaker per terminal [1]. The bus in Fig. 6 has no sectionalizing breaker, and all of the terminal CTs are assigned to a single differential zone per phase. For this substation, a bus fault results in the loss of all feeds until service is restored. In the single-bus configuration, each terminal is assigned to only a single bus. Because there is no need for dynamic current switching to form zones, currents are statically assigned to differential zones and disconnect status information is not required for protection. As a result, high-impedance relaying is well suited to this substation configuration if appropriate CTs are available.

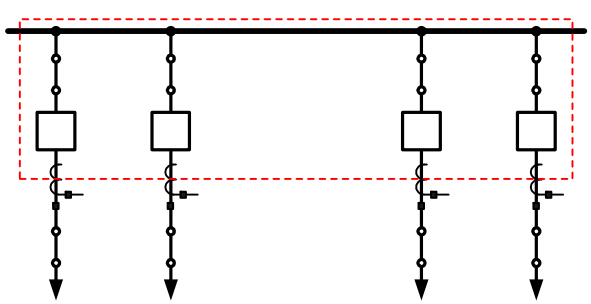

Fig. 6. Single Bus Without Sectionalizing Breaker

A sectionalizing breaker makes substation service more reliable by allowing half of the bus to be isolated during a fault on any particular zone, leaving the other half in service. On average, only half of the load is interrupted during a bus fault if sources and loads are evenly distributed between both bus sections. In exchange for greater service reliability, the addition of a sectionalizing breaker increases the complexity of the differential protection. The following figures in this subsection show different ways of configuring differential zones for a single-bus substation with a sectionalizing breaker.

When the CTs of the sectionalizing breaker are arranged in an overlapping configuration, the differential zone boundaries are as shown in Fig. 7. For a fault on the left bus section, Zone 1 becomes unbalanced and all breakers within the zone trip. The behavior for a fault on the right bus section is similar. For a fault between the CTs of the sectionalizing breaker, both Zone 1 and Zone 2 become unbalanced and all substation breakers trip. Faults between the CTs of the sectionalizing breaker are cleared as quickly as possible, but all substation loads are interrupted.

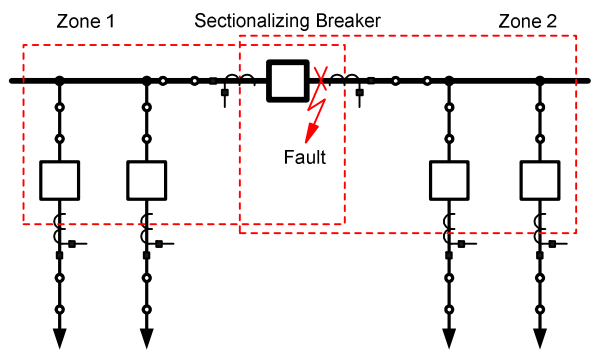

Fig. 7. Single Bus With Sectionalizing Breaker and Overlapping Sectionalizing Breaker CTs

When the CTs of the sectionalizing breaker are arranged in a nonoverlapping configuration, the differential zone boundaries are as shown in Fig. 8. In this case, the CTs of the sectionalizing breaker are assigned to Zone 1 and Zone 3 with negative polarity and to Zone 2 with positive polarity. This can be accomplished with physical wiring or via a setting in an advanced differential relay.

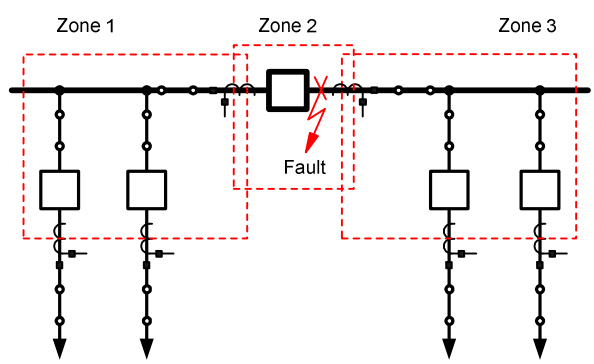

Fig. 8. Single Bus With Sectionalizing Breaker and Nonoverlapping Sectionalizing Breaker CTs

For left and right bus section faults, the behavior for this configuration is the same as for the overlapping configuration described earlier. However, the nonoverlapping configuration can partially preserve the substation operation when a fault

occurs between the CTs of the sectionalizing breaker. The procedure for doing so is the following:

1. Trip the sectionalizing breaker when Zone 2 becomes unbalanced during the fault.
2. Remove the CT currents of the sectionalizing breaker from Zone 1 and Zone 3 after the sectionalizing breaker opens.
3. Trip the breakers in the zone that becomes unbalanced.

This process clears the Zone 2 fault after a delay that is roughly equal to the breaker opening time and takes only one bus section out of service, maximizing the service reliability of the substation. The sectionalizing breaker status must be brought into the differential relay through auxiliary contacts. An advanced differential relay with dynamic zone selection is especially well-suited to implementing this procedure because it can remove the currents of the sectionalizing breaker from the zones via relay programming without any requirement for physical current switching.

Instrument transformer cost can be reduced by installing only a single sectionalizing breaker CT at the substation, as shown in Fig. 9. However, this arrangement is disadvantageous in terms of protection speed. In Fig. 9, the CT of the sectionalizing breaker is assigned to Zone 1 with negative polarity and to Zone 2 with positive polarity. For a fault between the sectionalizing breaker and its CT, Zone 2 becomes unbalanced and all breakers within the zone trip. Zone 1 remains balanced during the fault, and the fault current persists after the Zone 2 terminal breakers and sectionalizing breaker open. After the sectionalizing breaker failure delay time (typically 10 cycles), the Zone 1 terminals trip on a breaker failure declaration, clearing the fault. This results not only in delayed tripping but also in the loss of all substation loads.

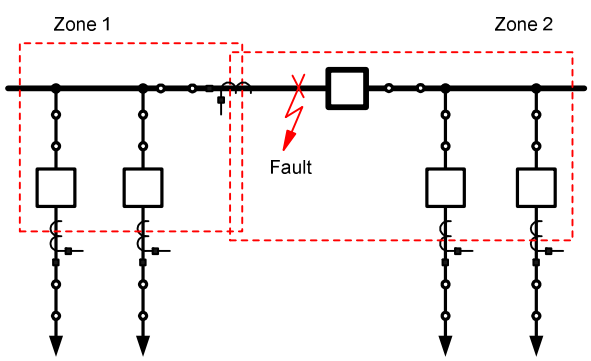

Fig. 9. Single-Bus Configuration With Sectionalizing Breaker and a Single Sectionalizing Breaker CT

B. Fast Bus

In distribution systems, loads are commonly fed radially from a single bus, as shown in Fig. 10. In this arrangement, each feeder has a CT, as does the main supply. A feeder fault (F1) causes both the main supply CT and the faulted feeder CT to detect an elevated current. During a bus fault (F2), the main supply CT detects an elevated current, but the feeder CTs do not. A bus fault for this radial system therefore has a signature that is detectable using overcurrent elements. In this case, bus protection does not require a dedicated bus differential relay. Protection for this bus can be achieved through coordination between a main overcurrent relay and the feeder overcurrent relays.

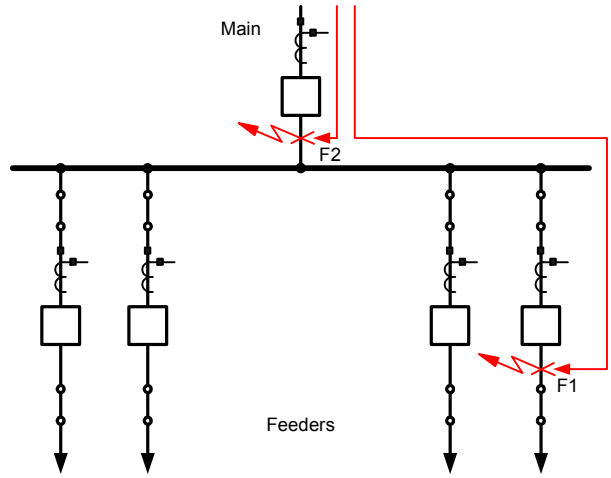

Fig. 10. Faulted Radial System With a Main Bus and Feeders

The main supply breaker trips for a bus fault after a coordination delay, which must only be long enough for the feeder relays to indicate whether or not they have detected an overcurrent condition. The delay is therefore considerably shorter than a typical overcurrent coordination delay (several cycles instead of a large fraction of a second). This protection scheme is commonly known as “fast bus” [2]. The feeder relays communicate their overcurrent element status to the main relay using either output contacts or digital communications protocols. Fig. 11 shows one possible output contact arrangement for fast bus protection.

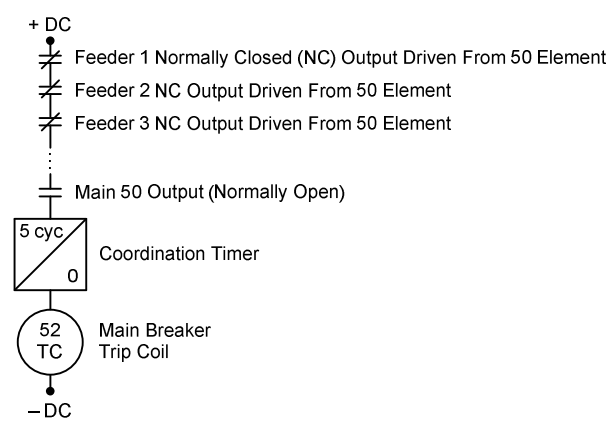

Fig. 11. Possible Fast Bus Output Contact Arrangement

In Fig. 11, normally closed feeder relay output contacts are wired in series with a normally open main relay contact. The feeder contacts are opened immediately on an overcurrent (American National Standards Institute [ANSI] Number 50) assertion, and the main contact is closed immediately on an overcurrent assertion. Once the main contact closes, the breaker trip coil is energized after a coordination time delay (shown as 5 cycles in Fig. 11), provided that all feeder contacts remain closed. For a bus fault, the feeder contacts remain closed and the main contact closes, energizing the

main breaker trip coil. For a feeder fault, at least one feeder contact opens before the coordination timer expires, preventing trip coil energization.

C. Breaker-and-a-Half and Double-Bus, Double-Breaker Configuration

Service reliability is increased by feeding each substation terminal from multiple paths, as in the breaker-and-a-half and double-bus, double-breaker configurations. These substation arrangements feature two buses connected by multiple diameters [1]. As shown in Fig. 12 and Fig. 13, each terminal is fed from the left and from the right and each bus has its own protection zone.

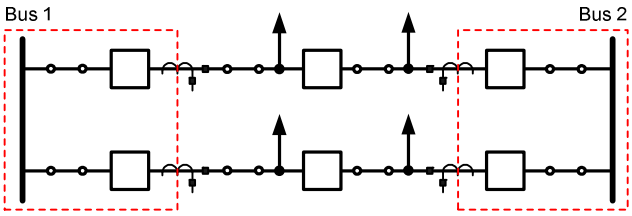

Fig. 12. Breaker-and-a-Half Configuration With Differential Zone Assignments

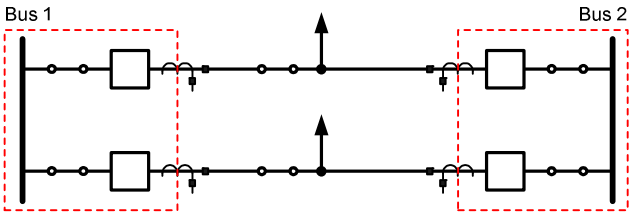

Fig. 13. Double-Bus, Double-Breaker Configuration With Differential Zone Assignments

If one of the buses experiences a fault, its differential relay operates and opens the breakers in the protection zone, leaving the other bus in service. As a result, a fault on one of the buses does not interrupt load. This arrangement enables convenient breaker maintenance in the same way. Any single breaker can be taken out of service without interrupting service to any terminal. Due to their high reliability, breaker-and-a-half substations are common in extra-high-voltage (EHV) applications. This added reliability entails relatively high construction cost because two buses must be constructed as well as multiple breakers per terminal (one and a half for breaker-and-a-half and two for double-bus, double-breaker configurations).

As a result of the station layouts and the allowed disconnect switch states, currents are assigned statically to bus differential zones for these substations. Disconnect status information is not necessary for bus protection. High-impedance bus differential relaying is suitable for these applications, given appropriate CTs. Substation faults outside the differential zones are treated as line faults.

Generally, if a substation breaker fails to open when a trip signal is issued, other breakers must open as backup to clear a fault. The layout of a breaker-and-a-half substation results in greater breaker failure scheme complexity relative to a single bus without a sectionalizing breaker, for example. The following discussion compares breaker failure protection for the breaker-and-a-half and single-bus configurations.

Fig. 14 illustrates a single-bus substation in which the leftmost breaker (BK1) fails to operate for either a line fault or a bus fault. For a line fault (F1), all terminals connected to the bus (BK2, BK3, and BK4) must trip in order to de-energize the fault when BK1 fails. When BK1 fails to open for a bus fault (F2), the breaker failure protection must send a transfer trip to the breaker on the other end of the line (BKR1) to clear the fault in less than the remote Zone 2 stepped distance delay time. Because BK2, BK3, BK4, and BKR1 must trip whenever BK1 fails to open, the breaker failure scheme for BK1 incorporates these breaker trips. Because all of the substation breakers serve the same role, the breaker failure protection for this substation can consist of a single lockout relay for the bus breakers and a dedicated transfer trip for each terminal.

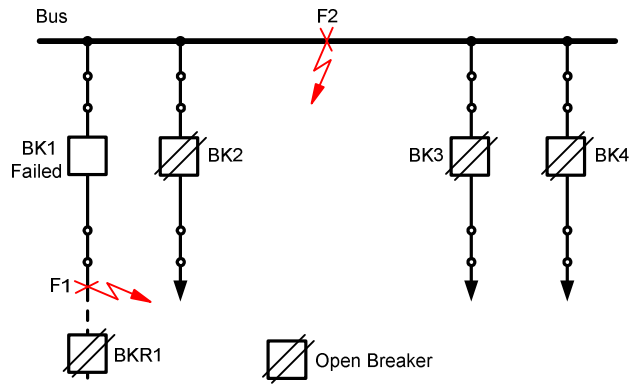

Fig. 14. Breaker Failure Trips and Faults for BK1 (Single-Bus Configuration)

In contrast, the breakers at a breaker-and-a-half substation serve different roles, making the situation more complex when one breaker fails to operate correctly. Fig. 15 shows a bus breaker (BK1) that fails to operate for a fault. If BK1 fails to open for a bus fault (F1), the remote line breaker (BKR1) and middle breaker (BK2) must trip. If BK1 fails for a line fault (F2), the breaker failure protection must clear the adjacent bus (Bus 1) by tripping BK4. Because breakers BK2, BK4, and BKR1 must open whenever BK1 fails, the breaker failure scheme for BK1 incorporates these breaker trips.

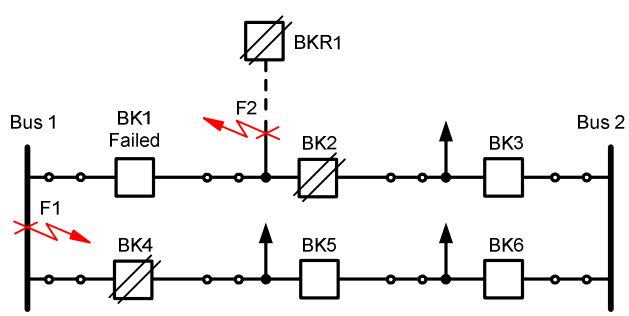

Fig. 15. Breaker Failure Trips and Faults for BK1 (Breaker-and-a-Half Configuration)

Fig. 16 shows a middle breaker (BK2) that fails to operate for a fault. BK2 is used primarily for line protection and does not normally operate for a bus fault. For a fault (F1) on the left line adjacent to BK2, BK3 and BKR2 must open if BK2 fails. For a fault (F2) on the right line adjacent to BK2, BK1 and BKR1 must open if BK2 fails. Because breakers BK1, BK3, BKR1, and BKR2 must open whenever BK2 fails, the breaker failure scheme for BK2 incorporates these breaker trips. Note that for a middle breaker failure, neither bus needs to be cleared. The set of local substation breaker failure trips is unique for each breaker, in contrast to the single bus. Breaker failure protection for this substation must make use of multiple lockout relays or use independent trip contacts for signaling the breakers.

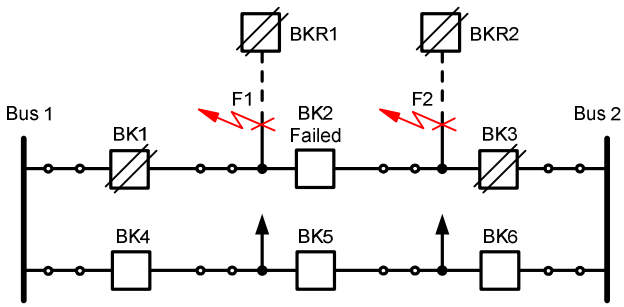

Fig. 16. Breaker Failure Trips and Faults for BK2 (Breaker-and-a-Half Configuration)

D. Double-Bus, Single-Breaker Configuration

In the double-bus, single-breaker configuration, terminals can connect to either of two buses, depending on the status of the substation disconnect switches [1]. Sources and loads are divided between the two buses to ensure service reliability, and the substation has good breaker economy with one breaker per terminal.

A bus coupler breaker connects both buses together under normal conditions, maximizing load-sharing capability between the buses. The options for assigning the coupler CTs to differential zones are essentially the same as those described previously for the single bus with a sectionalizing breaker (overlapping, nonoverlapping, and single CT). In Fig. 17, the source connects to Bus 2 through disconnect switch TBB2. Bus 1 connects to Bus 2 through disconnect CBB1, disconnect CBB2, and the bus coupler breaker. Feeder 1 is fed from Bus 1 through disconnect F1BB1.

With the disconnect switches configured as shown in Fig. 17 and the bus coupler configured in overlap, CT currents I01 and I03 are inputs to the Zone 1 differential element and CT currents I02 and I04 are inputs to the Zone 2 differential element. If F1BB1 is open, F1BB2 is closed, TBB2 is open, and TBB1 is closed, the zone assignments change because the terminals are connected to different buses. In this case, currents I03 and I04 are assigned to Zone 1 and I01 and I02 are assigned to Zone 2. Clearly, input currents to the differential zones are not fixed for this substation. The zones are formed dynamically by assigning currents to the zones based on disconnect auxiliary contact status inputs to the protective relay. In this example, a check zone is used as a second trip criterion and I01 and I04 are assigned to the check zone.

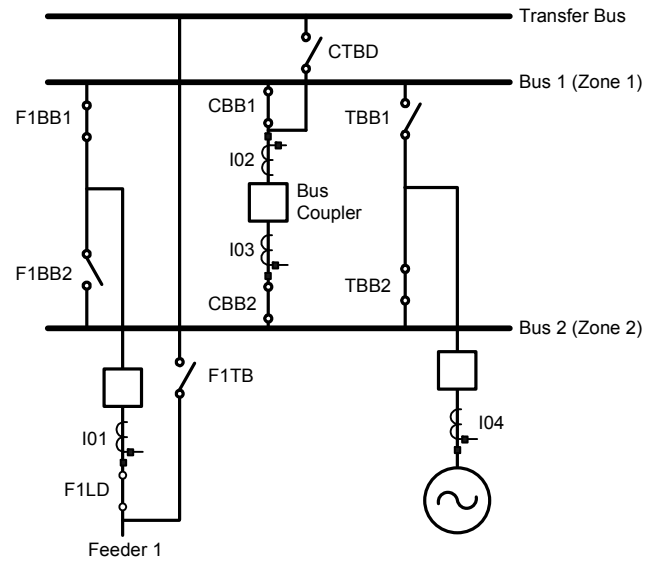

Fig. 17. Double-Bus, Single-Breaker Configuration With Transfer Bus (Normal Operation)

When disconnects F1BB1 and F1BB2 in Fig. 17 are both closed, for example, the current I01 cannot be assigned solely to Zone 1 or Zone 2. Both buses contribute a portion of the current. If Zone 1 and Zone 2 remain separate under these conditions, they can become unbalanced and cause an unwanted operation. When disconnect switches form a solid connection between the two buses, the two bus zones must merge into a single zone. When the bus differential zones are merged, the currents from both zones are assigned to this single zone.

The coupler forms an electrical connection between the two buses under normal conditions, but the coupler can open during a fault to isolate the buses, unlike a disconnect switch. Because the coupler CTs are internal to the aggregate bus zone after the merge, they can be removed from the differential calculations. Whether or not to trip the coupler during a bus fault with merged zones is a matter of protection philosophy because the fault is cleared by the other terminals connected to the merged zone.

Consider the two most common bus differential relay types in the context of the double-bus, single-breaker configuration. A high-impedance relaying scheme physically forms an operating current by connecting CTs in parallel. For the bus shown in Fig. 17 to be protected with a high-impedance relay, the CT connections must be physically rewired when a terminal-to-bus connection changes. There is a disadvantage inherent in this. Physically switching CT current requires the installation of make-before-break auxiliary relay logic that safely switches CT inputs to the high-impedance element. The physical switching of the CT currents is potentially dangerous because it runs the risk of open-circuiting a CT on the secondary side. An open-circuited CT can develop a dangerously high voltage across its secondary conductors. This high voltage can cause the breakdown of secondary insulation and present a danger to personnel.

An advanced differential relay (low-impedance) with dynamic zone selection is well suited to protecting buses with variable zone assignments. Such a relay can reconfigure its differential elements without any change to CT wiring. CT wiring is established at commissioning and remains fixed, eliminating hazards and complexity associated with current switching external to the relay. Reassignment of current values to differential zones is accomplished through relay programming. The relay must know the status of each disconnect switch to appropriately form the differential zones, and this status is communicated via disconnect auxiliary contacts and low-energy digital inputs on the relay.

If disconnect auxiliary contacts malfunction, the assignment of currents to differential zones may not be consistent with the actual substation arrangement. A differential relay can misoperate in such a case. A check zone provides security against false tripping due to disconnect status contact malfunction [3] [4]. Conceptually, an entire substation is treated as a single node, and the currents into the node are summed in accordance with Kirchhoff's current law. Regardless of the status of the disconnect switches, a fault is indicated if the check zone currents do not sum to zero. If the normal differential operating current is non-zero and the check zone operating current is zero, the most probable cause is a faulty disconnect status contact. Check zone supervision of the normal differential element significantly reduces the chance of a false trip.

There are several other options for a second trip criterion to supervise the differential element. In an advanced differential relay, a directional element can provide additional security during an external fault with CT saturation [5]. During such an event, fault current contributions flow through each of the unfaulted terminals and aggregate in the faulted terminal, causing the CT on the faulted terminal to saturate. This results in a false operating current. However, the current in the faulted terminal is out of phase with the other zone currents, indicating an external fault. The directional element chooses one of the currents as a reference quantity and calculates the phase angles of the other currents with respect to the reference. The element declares an internal fault only if all of the currents are substantially in phase. This declaration can supervise the normal differential element.

Voltage elements can be used to indicate whether a fault has occurred in the vicinity of a protected bus. A fault generally reduces the positive-sequence voltage magnitude (balanced and unbalanced faults) and increases the zero-sequence and negative-sequence voltage magnitudes (unbalanced faults). These signatures can be used to supervise a differential element, but they are not as selective as a check zone or a directional element because they cannot distinguish between faults that are internal or external to the protection zone.

When a surge arrester conducts to earth within a differential zone, an operating current momentarily develops. To prevent unwanted tripping, a security time delay (typically less than 0.25 cycles) can supervise the differential element [5]. With time-delay supervision, operating current due to a conducting surge arrester does not persist long enough to cause a false trip. A genuine fault results in an operating current that persists until the fault is de-energized.

Fig. 18 shows a double-bus, single-breaker substation with a transfer bus. A transfer bus allows terminal breaker maintenance without load interruption.

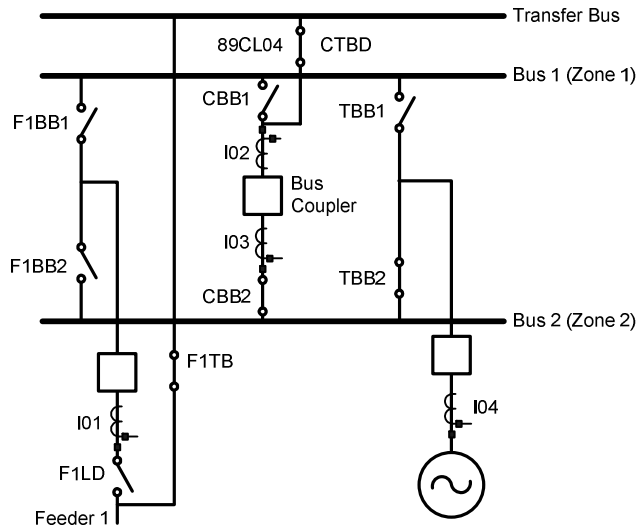

Fig. 18. Double-Bus, Single-Breaker Configuration With Transfer Bus and Inboard CT on Feeder 1 (Transfer Operation)

In Fig. 18, assume that Feeder 1 is put on transfer. A source feeds Bus 2 through disconnect TBB2, and Bus 2 connects to the transfer bus through disconnect CBB2, the bus coupler, and disconnect CTBD. The transfer bus then connects to Feeder 1 through disconnect F1TB, bypassing the Feeder 1 breaker. Fig. 18 shows an inboard CT on Feeder 1, whereas Fig. 19 shows an outboard CT on Feeder 1. The status of a CT as inboard or outboard depends on its position relative to the connection point between the feeder and the transfer bus. If the load current flows through the feeder CT when the feeder is on transfer, the CT is outboard. If the load current does not flow through the feeder CT while the feeder is on transfer, the CT is inboard [3].

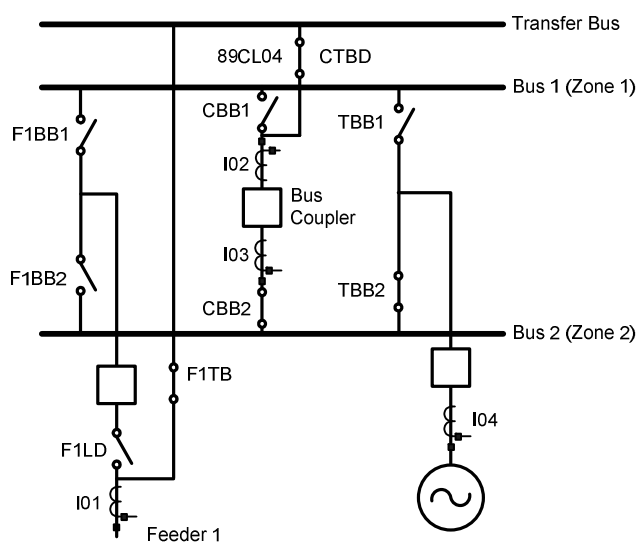

Fig. 19. Double-Bus, Single-Breaker Configuration With Transfer Bus and Outboard CT on Feeder 1 (Transfer Operation)

While Feeder 1 is on transfer, the bus coupler acts as its replacement breaker. There are options for configuring protection for Feeder 1 in this case, mostly depending on whether the CTs are inboard or outboard.

One option is to trip the coupler with the normal Feeder 1 line relay for line faults. This requires routing a trip signal from the Feeder 1 line relay to the coupler. If Feeder 1 has an inboard CT, the coupler CT current (I03) must be input to the Feeder 1 line relay, and the transfer bus becomes part of the protected line. If Feeder 1 has an outboard CT, no current rerouting is required and the transfer bus has its own differential protection zone, consisting of I01 and I03 in this case.

Another option for protecting a transferred line is to use a dedicated coupler relay. This method requires no trip signal or current rerouting but requires settings changes every time a different line goes on transfer. These settings changes can be made manually in older relays or automatically in a microprocessor-based relay with multiple settings groups. Within the microprocessor-based relay, the enabling condition for each settings group is a closed indication from the transfer disconnect status contact for the associated line (F1TB in Fig. 19, for example).

Recall that under normal conditions, I01 and I03 are assigned to Zone 1, I02 and I04 are assigned to Zone 2, and I01 and I04 are assigned to the check zone. When Feeder 1 is on transfer and the I01 CT is outboard, as in Fig. 19, all zones are balanced. For example, load current enters the I03 CT on the polarity side and enters the I01 CT on the nonpolarity side, causing the two measured currents to sum to zero and balance Zone 1.

If the I01 CT is inboard and Feeder 1 is on transfer, as in Fig. 18, current I01 is no longer available. This unbalances Zone 1 and the check zone, possibly resulting in false tripping unless balance is restored.

In Fig. 18, disconnect CBB1 is open and disconnect CTBD is closed, facilitating line transfer. This disconnect status breaks the connection between Bus 1 and Bus 2 through the bus coupler, but current still flows through I03 and must be removed from the Zone 1 differential calculations. Inclusion of I03 in Zone 1 can be made conditional on the status of the auxiliary contact for CTBD (89CL04). When the status contact indicates to the bus differential relay that CTBD is closed, I03 is removed from Zone 1, balancing Zone 1.

Ideally, currents are statically assigned to a check zone without regard for disconnect status. In the case illustrated by Fig. 18, a change in the substation configuration has resulted in the loss of one of the check zone current measurements. This missing current must be added to balance the check zone, or the check zone must be switched off. I01 is the missing Feeder 1 current, which now flows through coupler CTs I02 and I03. Conditionally adding I02 (with positive polarity) or I03 (with negative polarity) balances the check zone. This allows the check zone to continue to provide supervisory trip permission under transfer conditions, albeit as a function of the auxiliary disconnect status. I02, for example, can be included in the check zone when status contact 89CL04 indicates that disconnect CTBD is closed.

IV. Conclusion

Each bus type requires specific protection considerations. Table I in the appendix provides a summary of protection scheme recommendations for the bus types discussed in this paper. Differential zone currents for the single-bus, breaker-and-a-half, and double-bus, double-breaker arrangements are statically assigned. These substations can be protected by high-impedance relays if suitable CTs are available. The double-bus, single-breaker arrangement has dynamically reconfigurable differential zones and is better protected by advanced low-impedance differential relaying. With advanced differential relaying, the zones can be reconfigured without changes to physical wiring. Fast bus protection, although simple and economical, is generally not recommended over a differential scheme unless factors prohibit the implementation of a differential scheme.

CT saturation, surge arrester operation, and faulty disconnect status contacts necessitate supervisory elements and additional trip criteria. These can include check zones, directional elements, security timers, and voltage supervision. Sectionalizing breakers, multiple buses, and transfer capability enhance substation service reliability in exchange for greater protection scheme complexity.

V. Appendix

Table I summarizes the protection scheme recommendations presented in this paper.

Table I
Bus Comparison Chart and Protection Scheme Recommendations

Application	Protection Scheme	Recommended
Single-bus configuration	Low-impedance differential	Yes
	Advanced low-impedance differential	Yes
	High-impedance differential	Yes
	Fast bus	Neutral
Breaker-and-a-half and double-bus, double-breaker configurations	Low-impedance differential	Yes
	Advanced low-impedance differential	Yes
	High-impedance differential	Yes
	Fast bus	No
Double-bus, single-breaker configuration with or without transfer bus	Low-impedance differential	No
	Advanced low-impedance differential	Yes
	High-impedance differential	No
	Fast bus	Neutral

VI. References

[1] IEEE Standard C37.234-2009, IEEE Guide for Protective Relay Application to Power System Buses.

[2] H. J. Altuve Ferrer and E. O. Schweitzer, III (eds.), *Modern Solutions for Protection, Control, and Monitoring of Electric Power Systems*. Schweitzer Engineering Laboratories, Inc., Pullman, WA, 2010.

[3] C. Labuschagne, R. Moxley, E. Jessup, and J. Needs, "Low-Impedance Bus Differential – Security and Reliability in Complex Bus Arrangements," proceedings of the 11th IET International Conference on Developments in Power System Protection, Birmingham, UK, April 2012.

[4] L. Steenkamp, C. Labuschagne, and E. Stokes-Waller, "Tutorial: Complex Busbar Protection Application," proceedings of the 34th Annual Western Protective Relay Conference, Spokane, WA, October 2007.

[5] A. Guzmán, C. Labuschagne, and B. Qin, "Reliable Busbar and Breaker Failure Protection With Advanced Zone Selection," proceedings of the 31st Annual Western Protective Relay Conference, Spokane, WA, October 2004.

VII. Biographies

Caitlin Martin, P.E., is an electrical engineer at Bonneville Power Administration. She has worked primarily as a system protection engineer with experience in design and planning since 2006. She graduated from Portland State University in 2008 with a BSEE. She is a registered Professional Engineer in the state of Washington.

Steven Chase received his bachelor of science degree in electrical engineering from Arizona State University in 2008 and his master of science in electrical engineering degree in 2009. He worked for two years as a substation design intern at Salt River Project, an Arizona water and power utility. He joined Schweitzer Engineering Laboratories, Inc. in 2010, where he works as a power engineer in the research and development division. He is currently an Engineer in Training.

Thanh-Xuan Nguyen received her bachelor of science degree in electrical engineering and computer science from the University of California at Berkeley in 2001 and her master of engineering degree in electrical engineering from the University of Idaho in 2012. She has worked at Schweitzer Engineering Laboratories, Inc. since 2001 and has been involved with designing, testing, and validating a variety of generation, distribution, and transmission products. Presently, she is a lead product engineer in the research and development division. Thanh-Xuan holds two United States patents. She is a registered Professional Engineer in the state of Washington, an IEEE member, and an SWE member.

Dereje Jada Hawaz received his bachelor of science degree in electronics engineering technology from DeVry University in 1999 and is currently pursuing his master of science in electrical engineering from the University of Idaho. He joined Schweitzer Engineering Laboratories, Inc. in 1999 and has been involved in designing, developing, and validating protective relays. He is currently a power engineer in the research and development division. He is an IEEE member.

Jeff Pope is a development manager in the research and development division at Schweitzer Engineering Laboratories, Inc. He has been involved with the commissioning, control, protection, monitoring, and automation of power system apparatus for more than 25 years. Jeff received his BSEET in 1986 from the DeVry Institute of Technology and a master of engineering degree from the University of Wisconsin-Madison in 2005.

Casper Labuschagne earned his diploma (1981) and master's diploma (1991) in electrical engineering from Vaal University of Technology, South Africa, and is registered as a Professional Technologist with ECSA, the Engineering Council of South Africa. After gaining 20 years of experience with the South African utility Eskom, where he served as senior advisor in the protection design department, he began work at Schweitzer Engineering Laboratories, Inc. in 1999 as a product engineer. He transferred in 2003 to the research and development division, where he held the position of senior power engineer. In 2009, he was promoted to transmission engineering development manager. His responsibilities include the specification, design, testing, and support of transmission protection and control devices. Casper holds eight United States patents and has authored and coauthored several technical papers in the areas of protection and control.

© 2013 by Bonneville Power Administration and
Schweitzer Engineering Laboratories, Inc.
All rights reserved.
20130912 • TP6613-01